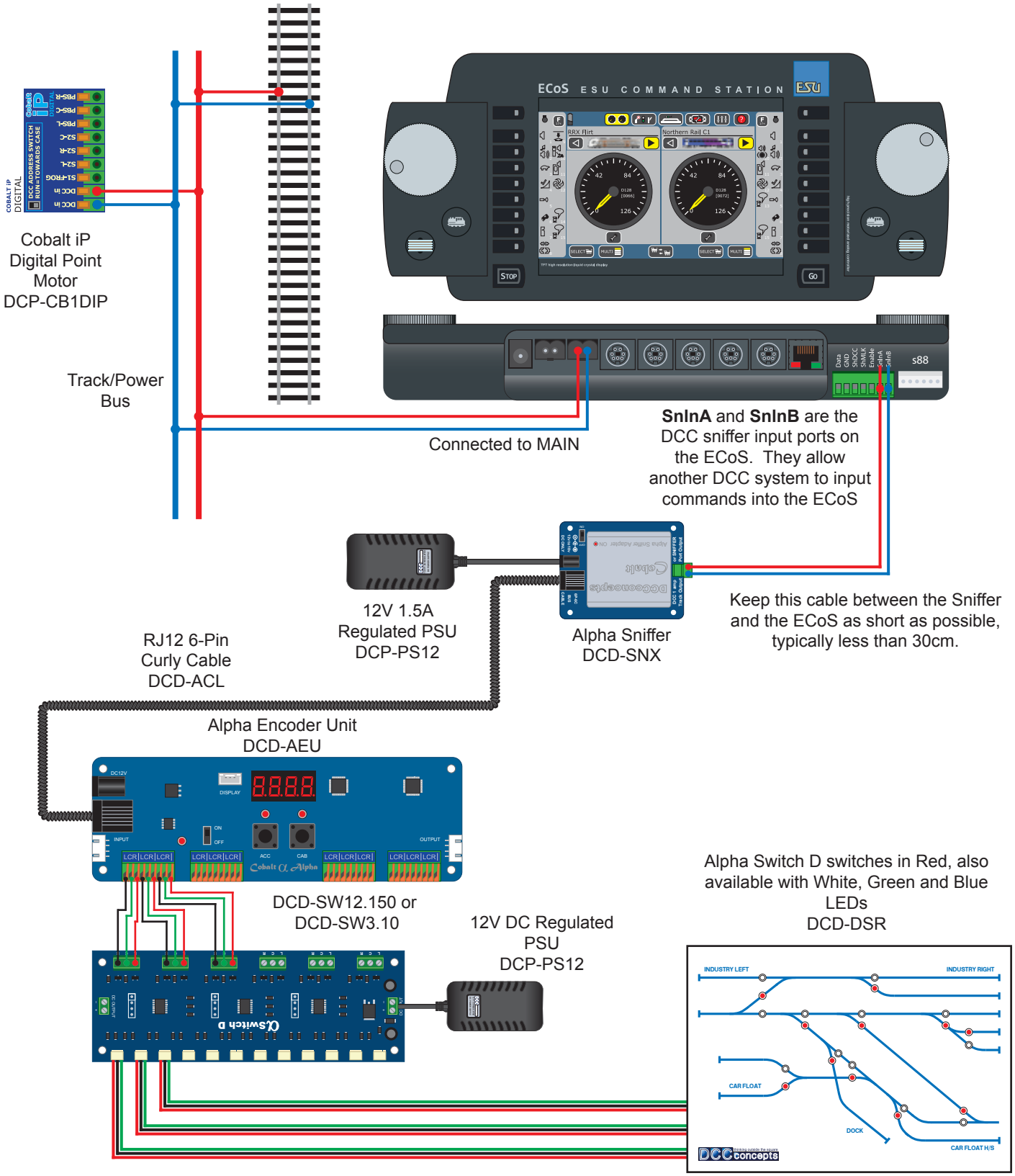# ECoS Command Station With Alpha Encoder Unit & Alpha Switch D