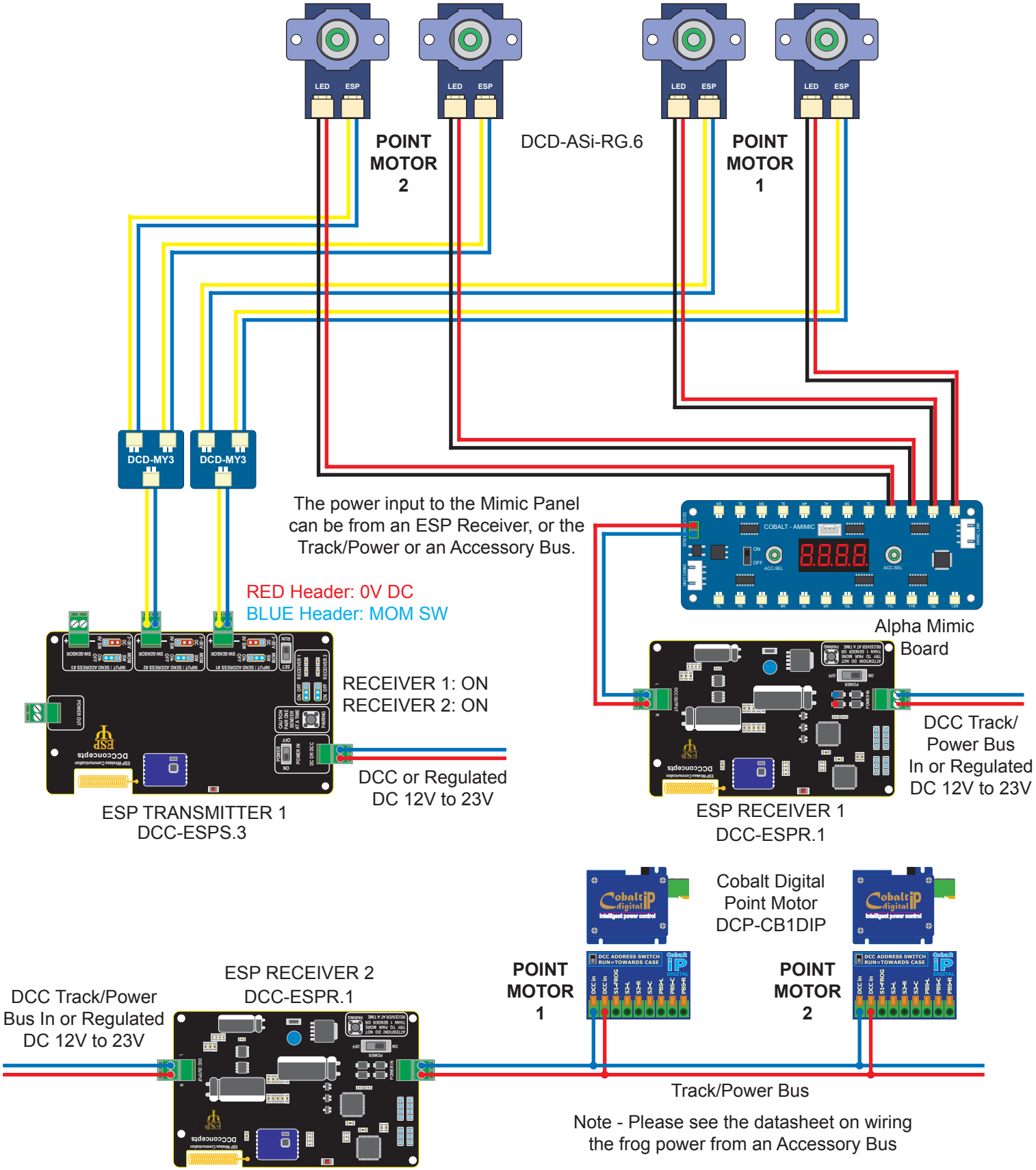Alpha Switch I On/Off Switches Controlling iP Digital Point Motors With Alpha Mimic & ESP