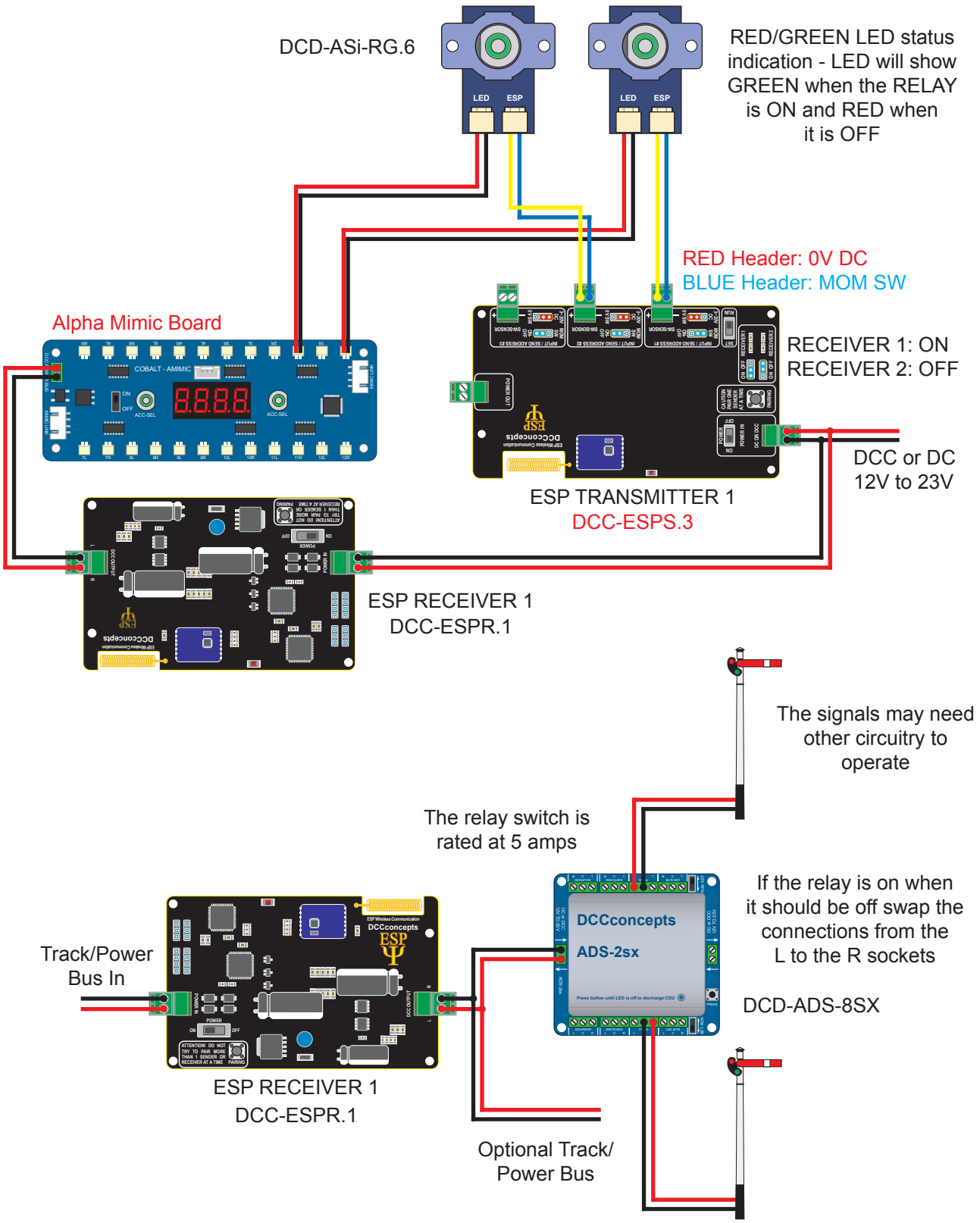Alpha Switch I On/Off Switch For A Digital Relay Using ESP & ADS-2SX