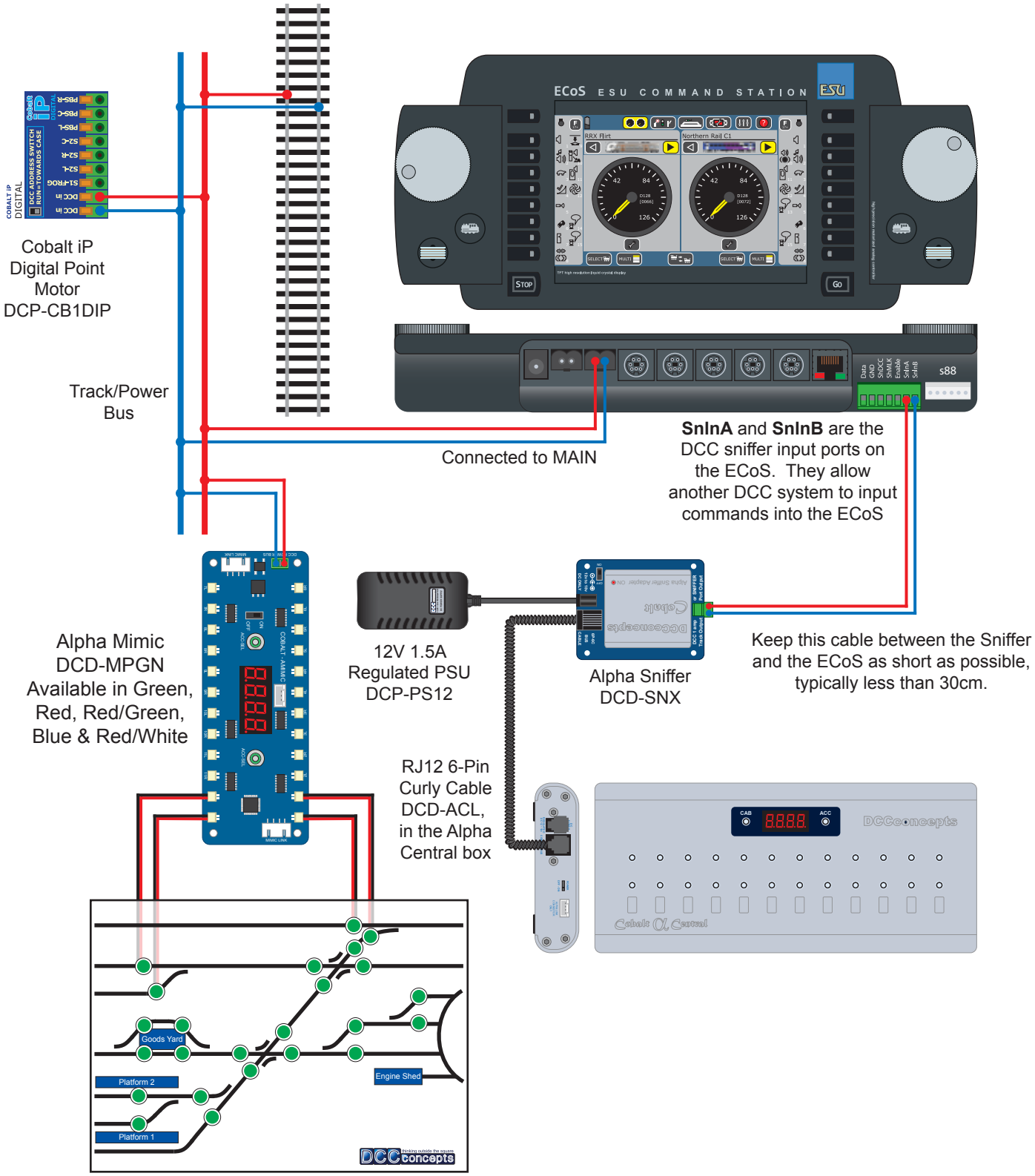ECoS Command Station With Alpha Mimic, Sniffer & Alpha Central